Shy 28/06

# Work Order ID 70867

*Thursday, June 16, 2011 12:42:05 PM*



**Item ID:** D3017-041 **Accept** **Setup Start** **Stop**

**Revision ID:**

**Item Name:** Back Frame Assembly

**Start Date:** 6/16/2011 **Start Qty:** 1.00 **Cust Item ID:**

**Required Date:** 6/24/2011 **Req'd Qty:** 1.00 **Customer:**

**Reference:**

**Approvals:** **Process Plan:** _____ **Date:** _____ **Tooling:** _____ **Date:** _____ **Run Start** **Stop**

**QC:** _____ **Date:** _____ **SPC (Y/N):** _____ **Date:** _____

| Sequence ID/ Work Center ID | Operation Description | Set Up/ Run Hours | Tool ID | Tool # | Plan Code | Accept Qty | Reject Qty | Reject Number | Insp. Stamp |
|---|---|---|---|---|---|---|---|---|---|

| Draw Nbr | Revision Nbr |
|---|---|
| D3017 | Rev B |

100
Large Fab
Large Fab

Weld per dwg A/R 4130 rod Batch: M100075 0.00
Large Fab

R 11-8-3 (X1)

**Memo** 0.00

1-Cut D3017-1, D3017-3 and D3017-5 tubes as per Dwg D3017

2-Bend D3017-1 and D3017-3 tube as per dwg D3017 (DT8598)

3-Drill holes in D3017-5 Using DT8622

4-Deburr

5-Assemble and weld as per Dwg D3017 using Welding Jig DT8598

6-Drill holes in back frame using DT8621

110
QC
Quality Control

QC9- Inspect visual per QSI004- Fusion Welds 0.00

1 0 BE 11/08/03

**Memo** 0.00

Dart Aerospace Ltd

| W/O: | | WORK ORDER CHANGES | | | | | |
|---|---|---|---|---|---|---|---|
| DATE | STEP | PROCEDURE CHANGE | By | Date | Qty | Approval Chief Eng / Prod Mgr | Approval QC Inspector |
| | | | | | | | |
| | | | | | | | |

**Part No:** _____ **PAR #:** _____ **Fault Category:** _____ **NCR:** Yes No **DQA:** _____ **Date:** _____

**Resolution:** _____ **Disposition:** _____ **QA: N/C Closed:** _____ **Date:** _____

| NCR: | | WORK ORDER NON-CONFORMANCE (NCR) | | | | | | |
|---|---|---|---|---|---|---|---|---|
| DATE | STEP | Description of NC Section A | Corrective Action Section B | | | Verification Section C | Approval Chief Eng | Approval QC Inspector |
| | | | Initial Chief Eng | Action Description Chief Eng | Sign & Date | | | |
| | | | | | | | | |
| | | | | | | | | |
| | | | | | | | | |

**NOTE:** Date & initial all entries

H:\fFORMS\Quality Assurance\approved QA\NCRWO RevE

# Work Order ID 70867

*Thursday, June 16, 2011 12:42:05 PM*



**Item ID:** D3017-041 **Accept** **Setup Start** **Stop**

**Revision ID:**

**Item Name:** Back Frame Assembly

**Start Date:** 6/16/2011 **Start Qty:** 1.00 **Cust Item ID:**

**Required Date:** 6/24/2011 **Req'd Qty:** 1.00 **Customer:**

**Reference:**

**Run Start** **Stop**

**Approvals:** **Process Plan:** _____ **Date:** _____ **Tooling:** _____ **Date:** _____

**QC:** _____ **Date:** _____ **SPC (Y/N):** _____ **Date:** _____

| Sequence ID/ Work Center ID | Operation Description | Set Up/ Run Hours | Tool ID | Tool # | Plan Code | Accept Qty | Reject Qty | Reject Number | Insp. Stamp |
|---|---|---|---|---|---|---|---|---|---|
| 120<br>QC<br>Quality Control | QC5- Inspect part completeness to step on W/O<br>**Memo** | 0.00<br>0.00 | | | | XC | | | |
| 130<br>Powdercoat<br>Powder Coating | Grey Sandtex(Ref:4.3.5.6) per QSI005 4.3<br>M1173378<br>**Memo**<br>START TIME: 10:15am<br>OVEN TEMPERATURE: 320°F<br>FINISH TIME: 10:45am | 0.00<br>0.00 | | | | | | | |
| 140<br>QC<br>Quality Control | QC3- Inspect Part Finish<br>**Memo** | 0.00<br>0.00 | | | | | | | |

Dart Aerospace Ltd

| W/O: | | WORK ORDER CHANGES | | | | | |
|---|---|---|---|---|---|---|---|
| DATE | STEP | PROCEDURE CHANGE | By | Date | Qty | Approval Chief Eng / Prod Mgr | Approval QC Inspector |
| | | | | | | | |
| | | | | | | | |

**Part No:** _____ **PAR #:** _____ **Fault Category:** _____ **NCR:** Yes No **DQA:** _____ **Date:** _____

**Resolution:** _____ **Disposition:** _____ **QA: N/C Closed:** _____ **Date:** _____

| NCR: | | WORK ORDER NON-CONFORMANCE (NCR) | | | | | | |
|---|---|---|---|---|---|---|---|---|
| DATE | STEP | Description of NC Section A | Corrective Action Section B | | | Verification Section C | Approval Chief Eng | Approval QC Inspector |
| | | | Initial Chief Eng | Action Description Chief Eng | Sign & Date | | | |
| | | | | | | | | |
| | | | | | | | | |
| | | | | | | | | |

**NOTE:** Date & initial all entries

H:\fFORMS\Quality Assurance\approved QA\NCRWO RevE

# Work Order ID 70867

*Thursday, June 16, 2011 12:42:05 PM*



**Item ID:** D3017-041 **Accept** **Setup Start**

**Revision ID:**

**Item Name:** Back Frame Assembly **Stop**

**Start Date:** 6/16/2011 **Start Qty:** 1.00 **Cust Item ID:**

**Required Date:** 6/24/2011 **Req'd Qty:** 1.00 **Customer:**

**Reference:**

**Run Start**

**Approvals:** **Process Plan:** _____ **Date:** _____ **Tooling:** _____ **Date:** _____

**Stop**

**QC:** _____ **Date:** _____ **SPC (Y/N):** _____ **Date:** _____

| Sequence ID/ Work Center ID | Operation Description | Set Up/ Run Hours | Tool ID | Tool # | Plan Code | Accept Qty | Reject Qty | Reject Number | Insp. Stamp |
|---|---|---|---|---|---|---|---|---|---|
| 150 | Identify as per dwg & Stock Location: GA | 0.00 | | | | | | | |
| Packaging | | | | | | | | | |
| Packaging | **Memo** w/o 70903 | 0.00 | | | | | | | |
| | | | | | | | | | 11/08/10 ① |
| 160 | QC21- Final Inspection - Work Order Release | 0.00 | | | | | | | |
| QC | | | | | | | | | |
| Quality Control | **Memo** | 0.00 | | | | | | | |
| | | | | | | | | | CK 11/08/10 |
| | | | | | | | | | 11-08-10 ① |

Dart Aerospace Ltd

| W/O: | | WORK ORDER CHANGES | | | | | |
|---|---|---|---|---|---|---|---|
| DATE | STEP | PROCEDURE CHANGE | By | Date | Qty | Approval Chief Eng / Prod Mgr | Approval QC Inspector |
| | | | | | | | |
| | | | | | | | |

**Part No:** _____ **PAR #:** _____ **Fault Category:** _____ **NCR:** Yes No **DQA:** _____ **Date:** _____

**Resolution:** _____ **Disposition:** _____ **QA: N/C Closed:** _____ **Date:** _____

| NCR: | | WORK ORDER NON-CONFORMANCE (NCR) | | | | | | |
|---|---|---|---|---|---|---|---|---|
| DATE | STEP | Description of NC Section A | Corrective Action Section B | | | Verification Section C | Approval Chief Eng | Approval QC Inspector |
| | | | Initial Chief Eng | Action Description Chief Eng | Sign & Date | | | |
| | | | | | | | | |
| | | | | | | | | |
| | | | | | | | | |

**NOTE:** Date & initial all entries

H:\fFORMS\Quality Assurance\approved QA\NCRWO RevE

# Picklist Print



*Thursday, June 16, 2011 12:42:03 PM*

**Work Order ID:** 70867

**Parent Item:** D3017-041

**Parent Item Name:** Back Frame Assembly

**Start Date:** 6/16/2011 **Required Date:** 6/24/2011

**Start Qty:** 1.00 **Required Qty:** 1.00

**Comments:** IPP A□01.09.19□New issue EC□
IPP RevB: as per revB DD verified by:JLM

| Component Item ID/ Item Name | Replacement Item ID | Mfg/ Purch | Bin Item | Primary Location | Last Location | Route Seq ID | Unit of Measure | Qty on Hand | Qty per Kit | Total Qty | Qty Issued | Date Issued | Status |
|---|---|---|---|---|---|---|---|---|---|---|---|---|---|
| M4130NT0.750W.083<br>4130 RD Tube .750 x.083W | | Purchased | No | | | 100 | f | 56.0170 | 2.458 | 2.587368<br>EZ | 11-8-3 | | |
| | | | | **Location** | | | **Loc Qty** | | **Loc Code** | | | | |
| | | | | MAT033 | | | 56.017 | | | | | | |
| | | | | | 117579 | | 32.1 | | | 2.58 | | | |
| | | | | | 117973 | | 23.917 | | | | | | |
| M4130NT0.750W.049<br>4130 RD Tube .750 x.049W | | Purchased | No | | | 100 | f | 52.0000 | 11.125 | 11.71053<br>EZ | 11-8-3 | | |
| | | | | **Location** | | | **Loc Qty** | | **Loc Code** | | | | |
| | | | | MAT033 | | | 52 | | | | | | |
| | | | | | 117973 | | 52 | | | 11.71 | | | |
| D3017-11<br>cap | | Manufactured | No | | | 100 | Each | 15.0000 | 2 | 2<br>EZ | 11-8-3 | | |
| | | | | **Location** | | | **Loc Qty** | | **Loc Code** | | | | |
| | | | | WA | | | 15 | | | | | | |
| | | | | | ~~69074~~ | | 15 | | | 2 | | | |
| D3017-7<br>Lug | | Manufactured | No | | | 100 | Each | 2.0000 | 3 | 3<br>EZ | 11-8-3 | | |
| | | | | **Location** | | | **Loc Qty** | | **Loc Code** | | | | |
| | | | | WA | | | 1 | | | | | | |
| | | | | | 69166 | | 1 | | | | | | |
| | | | | WA019 | | | 1 | | | | | | |
| | | | | | 52915 | | 1 | | | | | | |

70871 X3

Dart Aerospace Ltd

| W/O: | | WORK ORDER CHANGES | | | | | |
|---|---|---|---|---|---|---|---|
| DATE | STEP | PROCEDURE CHANGE | By | Date | Qty | Approval Chief Eng / Prod Mgr | Approval QC Inspector |
| | | | | | | | |
| | | | | | | | |

**Part No:** _____ **PAR #:** _____ **Fault Category:** _____ **NCR:** Yes No **DQA:** _____ **Date:** _____

**Resolution:** _____ **Disposition:** _____ **QA: N/C Closed:** _____ **Date:** _____

| NCR: | | WORK ORDER NON-CONFORMANCE (NCR) | | | | | | |
|---|---|---|---|---|---|---|---|---|
| DATE | STEP | Description of NC Section A | Corrective Action Section B | | | Verification Section C | Approval Chief Eng | Approval QC Inspector |
| | | | Initial Chief Eng | Action Description Chief Eng | Sign & Date | | | |
| | | | | | | | | |
| | | | | | | | | |
| | | | | | | | | |

**NOTE:** Date & initial all entries

H:\fFORMS\Quality Assurance\approved QA\NCRWO RevE

| ITEM No. | QTY -041 | PART NUMBER | DESCRIPTION |
|---|---|---|---|
| 1 | X | D3017-041 | BACK FRAME ASSEMBLY |
| 2 | 1 | D3017-1 | TUBE |
| 3 | 1 | D3017-3 | TUBE |
| 4 | 1 | D3017-5 | TUBE |
| 5 | 3 | D3017-7 | LUG |
| 6 | 2 | D3017-11 | END CAP |

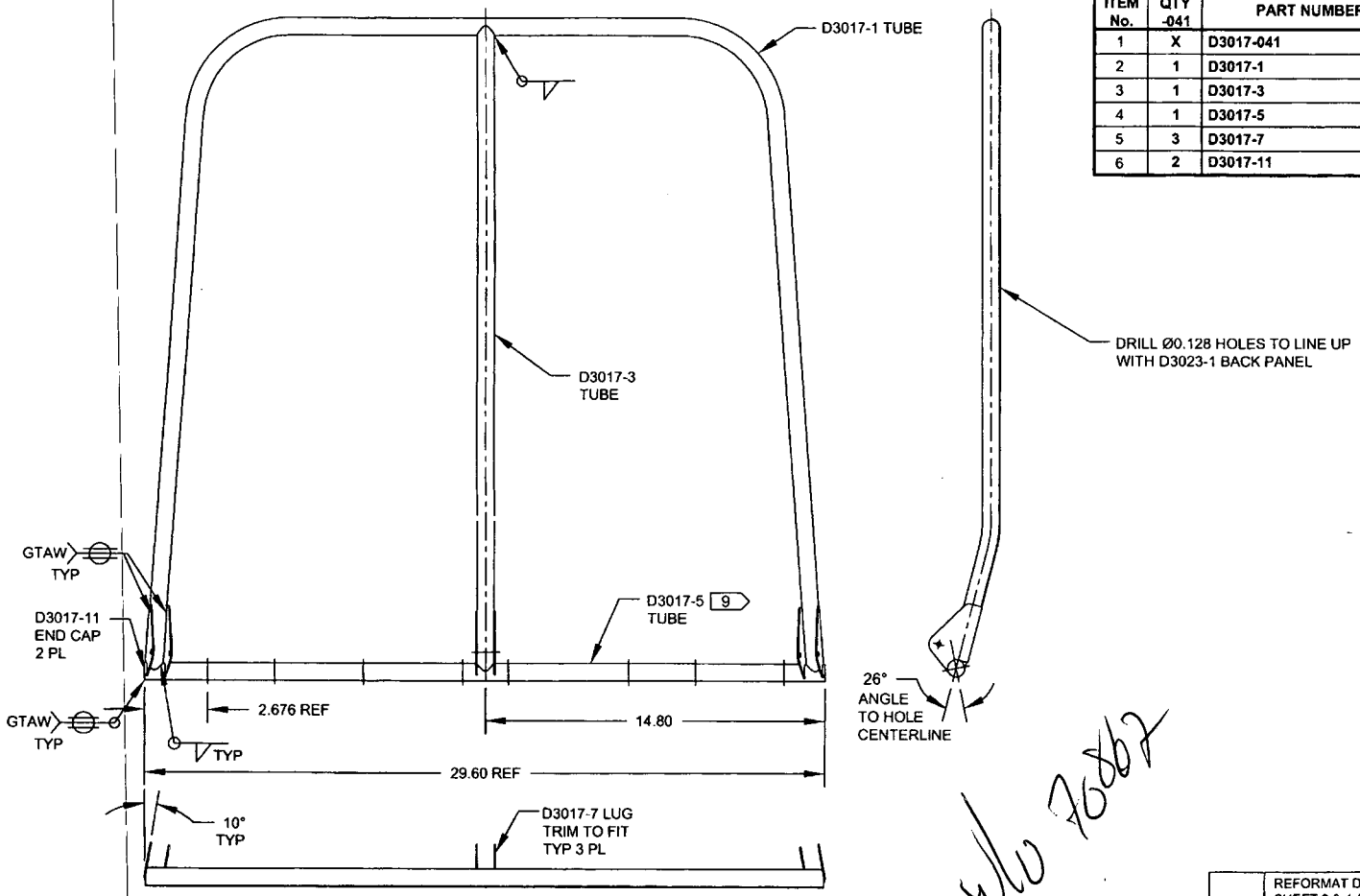


## D3017-041 BACK FRAME ASSEMBLY

**NOTES:**

1) MATERIAL: N/A
2) FINISH: POWDER COAT GREY SANDTEX (4.3.5.6) PER DART QSI 005 4.3
3) TOLERANCES: PER DART QSI 018 UNLESS OTHERWISE NOTED
4) UNITS: INCHES UNLESS OTHERWISE NOTED
5) BREAK SHARP EDGES: 0.005 TO 0.010 MAX
6) IDENTIFICATION: IDENTIFY WITH DART P/N "D3017-041" USING FINE POINT PERMANENT INK MARKER
7) WEIGHT: 4.50 lbs
8) WELD PER DART QSI 004
9) ROTATE SO THAT PILOT HOLES ARE ANGLED AS SHOWN IN END VIEW.

RELEASED
2010-02-02

WO 76867

| REV. | DESCRIPTION | BY | DATE |
|---|---|---|---|
| B | REFORMAT DWG, -5 TUBE WALL THKNS REVD (A8-3) SHEET 3 & 4 ADDED TO CLARIFY DRAWING. RADIUS CHANGED FROM R4.00 TO R3.75 (B4-2, B2-2). HOLE SIZE CHANGED FROM Ø0.191 TO Ø0.257 (C6-3, C3-3) | JPH | 10.01.13 |
| A | NEW ISSUE | CP | 01.05.18 |

| | | | |
|---|---|---|---|
| DESIGN | | DART AEROSPACE LTD<br>HAWKESBURY, ONTARIO, CANADA | |
| DRAWN | | | |
| CHECKED | | DRAWING NO. D3017 | REV. B<br>SHEET 1 OF 4 |
| MFG. APPR. | | | |
| APPROVED | | TITLE<br>BACK FRAME ASSEMBLY | SCALE<br>NTS |
| DE APPR. | | | |
| DATE | 10.01.13 | | |

COPYRIGHT © 2001 BY DART AEROSPACE LTD
THIS DOCUMENT IS PRIVATE AND CONFIDENTIAL AND IS SUPPLIED ON THE EXPRESS CONDITION THAT IT IS NOT TO BE USED FOR ANY PURPOSE OR COPIED OR COMMUNICATED TO ANY OTHER PERSON WITHOUT WRITTEN PERMISSION FROM DART AEROSPACE LTD.

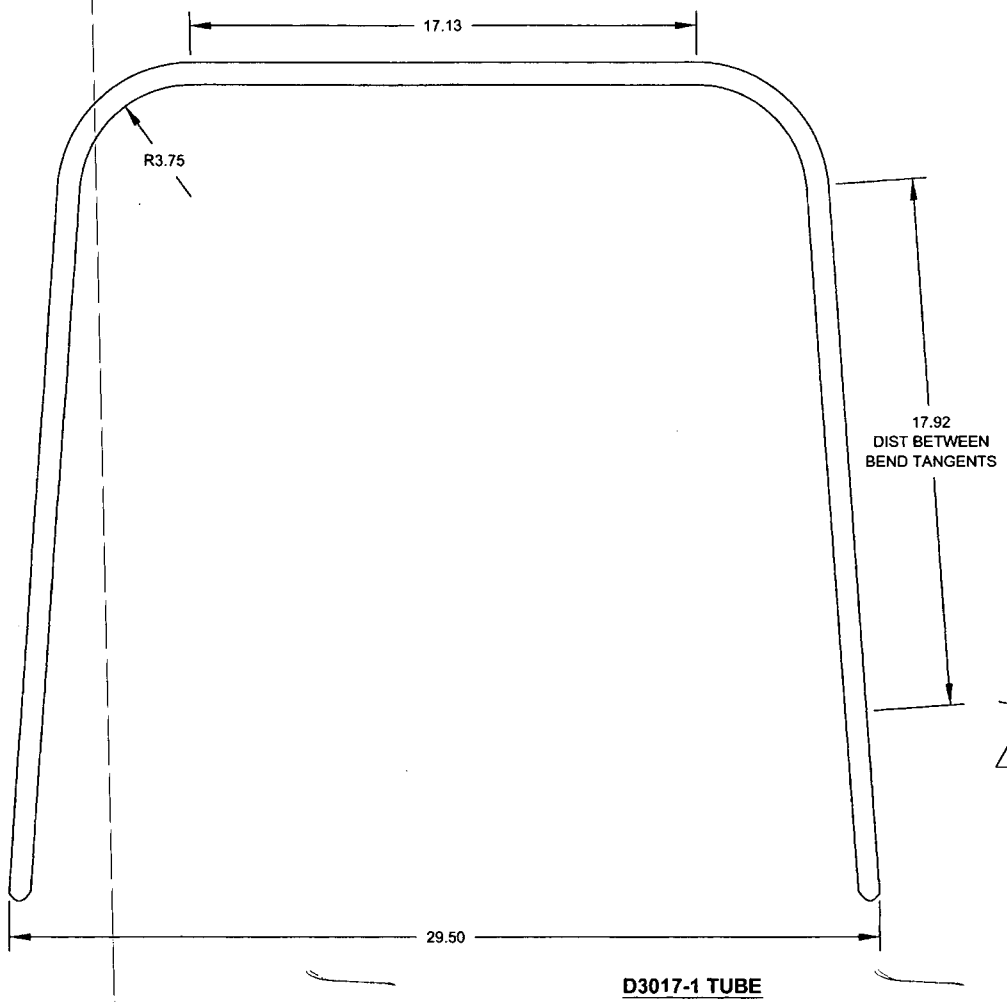


D3017-1 TUBE

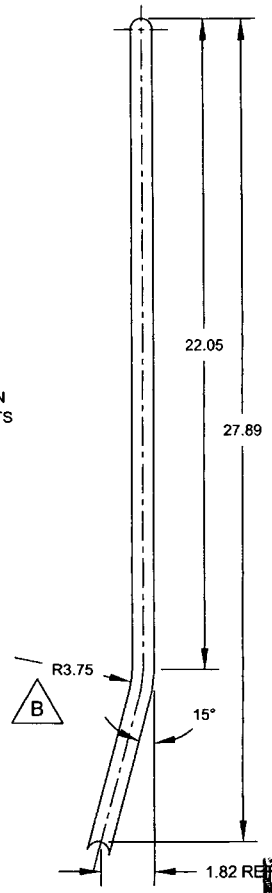


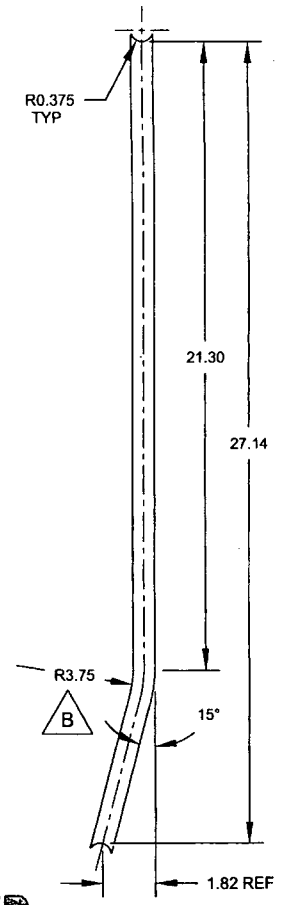


D3017-3 TUBE

RELEASED
2010 -02- 02

70867

**NOTES:**
1) MATERIAL: AISI 4130N TUBE, Ø0.75 DIA x 0.049 WALL (M4130N-T0750W049)
2) FINISH: NONE
3) TOLERANCES: PER DART QSI 018 UNLESS OTHERWISE NOTED
4) UNITS: INCHES UNLESS OTHERWISE NOTED
5) BREAK SHARP EDGES: 0.005 TO 0.010 MAX
6) IDENTIFICATION: NONE
7) WEIGHT: D3017-1: 2.38 lbs; D3017-3: 0.84 lbs.

| | | |
|---|---|---|
| DESIGN | | DART AEROSPACE LTD<br>HAWKESBURY, ONTARIO, CANADA |
| DRAWN | | |
| CHECKED | | DRAWING NO. D3017 — REV. B — SHEET 2 OF 4 |
| MFG. APPR. | | |
| APPROVED | | TITLE: BACK FRAME ASSEMBLY — SCALE: NTS |
| DE APPR. | | |
| DATE | 10.01.13 | |

COPYRIGHT © 2001 BY DART AEROSPACE LTD
THIS DOCUMENT IS PRIVATE AND CONFIDENTIAL AND IS SUPPLIED ON THE EXPRESS CONDITION THAT IT IS NOT TO BE USED FOR ANY PURPOSE OR COPIED OR COMMUNICATED TO ANY OTHER PERSON WITHOUT WRITTEN PERMISSION FROM DART AEROSPACE LTD

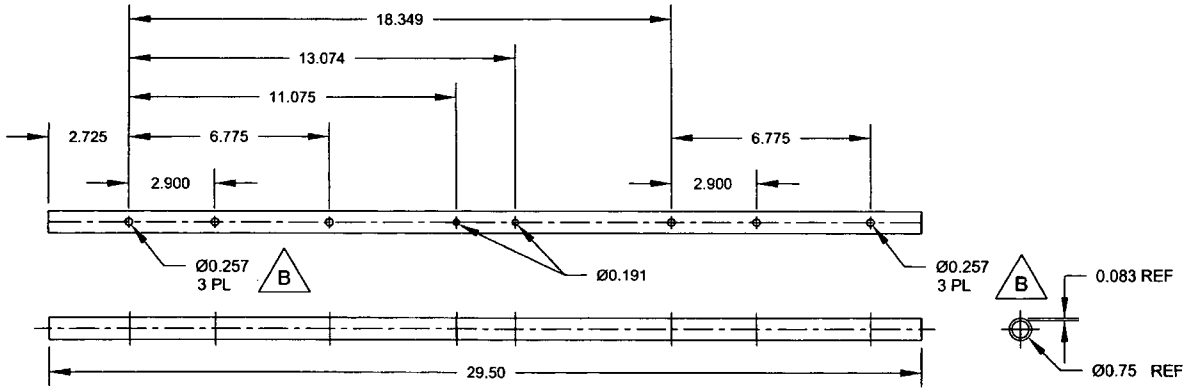


**D3017-5 TUBE**

RELEASED
2010-02-02

**NOTES:**
1) MATERIAL: AISI 4130N TUBE, Ø0.75 DIA x 0.083 WALL (M4130N-T0750W083) B
2) FINISH: NONE
3) TOLERANCES: PER DART QSI 018 UNLESS OTHERWISE NOTED
4) UNITS: INCHES UNLESS OTHERWISE NOTED
5) BREAK SHARP EDGES: 0.005 TO 0.010 MAX
6) IDENTIFICATION: NONE
7) WEIGHT: 0.89 lbs

| | | | |
|---|---|---|---|
| DESIGN | | **DART AEROSPACE LTD** HAWKESBURY, ONTARIO, CANADA | |
| DRAWN | | | |
| CHECKED | | DRAWING NO. | REV. B |
| MFG. APPR. | | D3017 | SHEET 3 OF 4 |
| APPROVED | | TITLE | SCALE |
| DE APPR. | | BACK FRAME ASSEMBLY | NTS |
| DATE | 10.01.13 | | |

COPYRIGHT © 2001 BY DART AEROSPACE LTD
THIS DOCUMENT IS PRIVATE AND CONFIDENTIAL AND IS SUPPLIED ON THE EXPRESS CONDITION THAT IT IS NOT TO BE USED FOR ANY PURPOSE OR COPIED OR COMMUNICATED TO ANY OTHER PERSON WITHOUT WRITTEN PERMISSION FROM DART AEROSPACE LTD

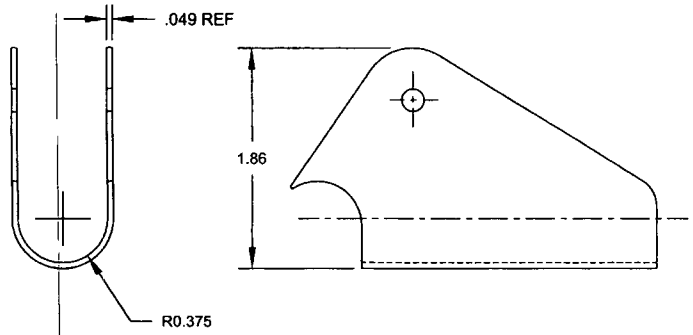


**D3017-7 LUG**
BENDING DETAIL
MAKE FROM D3017-7F

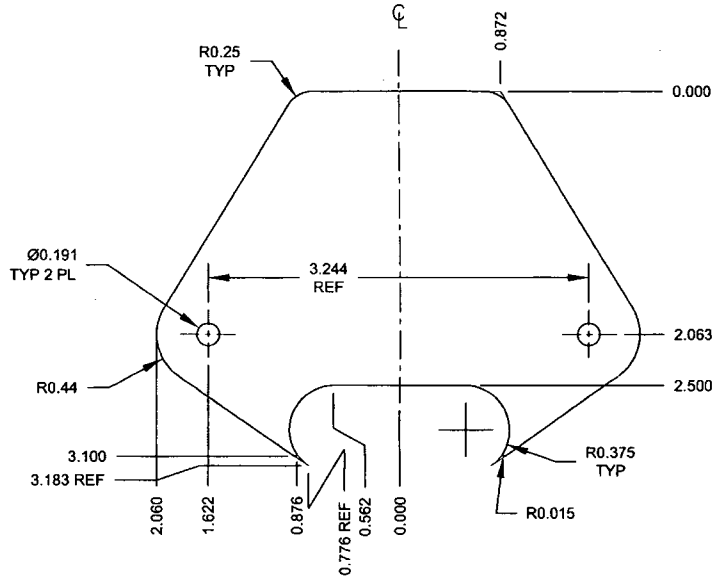


**D3017-7F FLAT PATTERN**
PART IS SYMMETRIC
ABOUT CENTERLINE

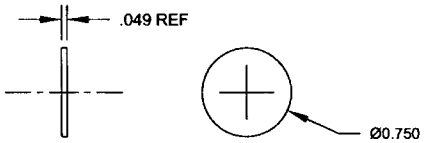


**D3017-11 END CAP**

RELEASED
2010 -02- 02

**NOTES:**
1) MATERIAL: AISI 4130N SHEET, 18 GAUGE (M4130N-S049)
2) FINISH: NONE
3) TOLERANCES: PER DART QSI 018 UNLESS OTHERWISE NOTED
4) UNITS: INCHES UNLESS OTHERWISE NOTED
5) BREAK SHARP EDGES: 0.005 TO 0.010 MAX
6) IDENTIFICATION: NONE
7) WEIGHT: -7: 0.12 lbs; -11: 0.01 lbs.

| | | | |
|---|---|---|---|
| DESIGN | | **DART AEROSPACE LTD** HAWKESBURY, ONTARIO, CANADA | |
| DRAWN | | | |
| CHECKED | | DRAWING NO. | REV. B |
| MFG. APPR. | | D3017 | SHEET 4 OF 4 |
| APPROVED | | TITLE | SCALE |
| DE APPR. | | BACK FRAME ASSEMBLY | NTS |
| DATE | 10.01.13 | | |

COPYRIGHT © 2001 BY DART AEROSPACE LTD
THIS DOCUMENT IS PRIVATE AND CONFIDENTIAL AND IS SUPPLIED ON THE EXPRESS CONDITION THAT IT IS NOT TO BE USED FOR ANY PURPOSE OR COPIED OR COMMUNICATED TO ANY OTHER PERSON WITHOUT WRITTEN PERMISSION FROM DART AEROSPACE LTD.